C.I.P.	9 x 20 VGW Country of Origin: AT	TAB. IV Date 09-05-05 Revision

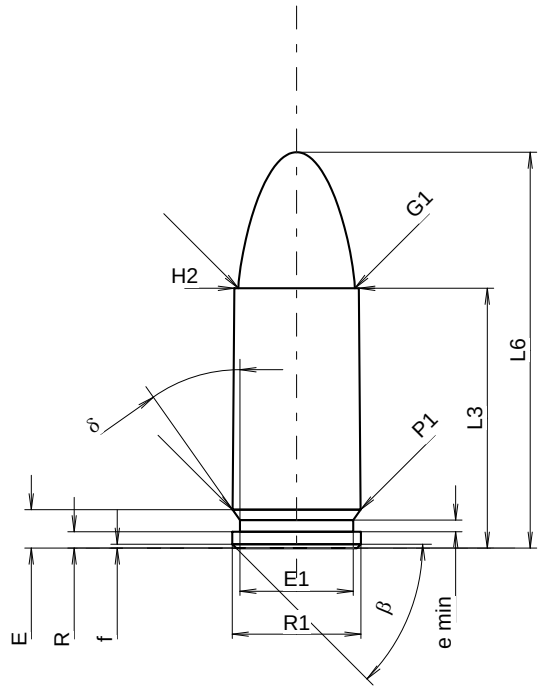

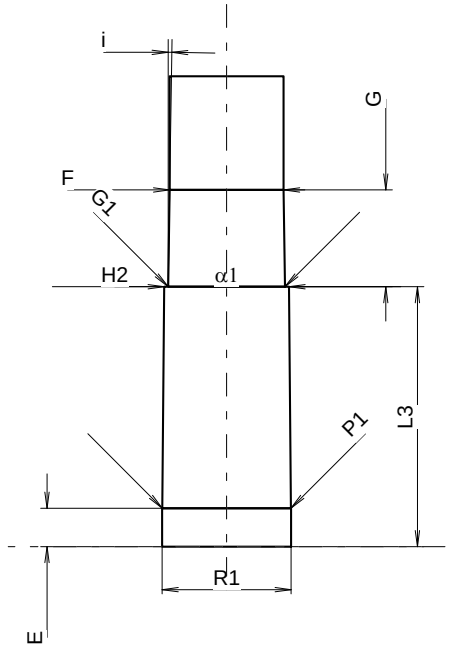

Scale 1.71:1

CARTRIDGE MAXI

Lengths

L1	=		
L2	=		
L3 1)	=	20.15	-0.25
L4	=		
L5	=		
L6	=	30.69	

Case Head

R	=	1.27
R1	=	9.96
R3	=	
E	=	2.98
E1	=	8.79
e min	=	0.90
δ	=	35°
f	=	0.30
β	=	45°

Powder Chamber

P1	=	9.93
P2	=	

Junction Cone

α	=	
S	=	
r1 min	=	
r2	=	

Collar

H1	=	
H2 1)	=	9.65

Projectile

G1 1)	=	9.03
G2	=	
F	=	
L3+G 1)	=	27.65

Pressures (Energies)
Method Transducer

Pmax	=	3000	bar
PK	=	3450	bar
PE	=	3900	bar
M	=	12.50	

Miscellaneous Dimensions

Fe 1)6)	=	0.30
delta L	=	

CHAMBER MINI

Lengths

L1	=	
L2	=	
L3 1)	=	20.15

Breech

R	=	
R1	=	10.00
R2	=	
R3	=	
r	=	

Powder Chamber

E	=	2.98
P1 1)	=	9.96
P2	=	

Junction Cone

α	=	
S	=	
r1 max	=	
r2	=	

Collar

H1	=	
H2 1)	=	9.68

Commencement of Rifling

G1 1)*	=	9.05
G 1)	=	7.50
α1	=	180°
h	=	
s	=	
i 1)*	=	0°52'42"
w	=	

Barrel

F 1)*	=	8.82
Z 1)	=	9.02

Grooves

b	=	2.49	
N	=	6	
u	=	250.00	
Q	=	62.61	mm²

Dimensions in << mm >>
Dimensions and Tolerances for Proof Barrels
see Appendix CR 1.

Notes:
1) Check for safety reasons
6) Headspace on Case Mouth
* Basic dimensions